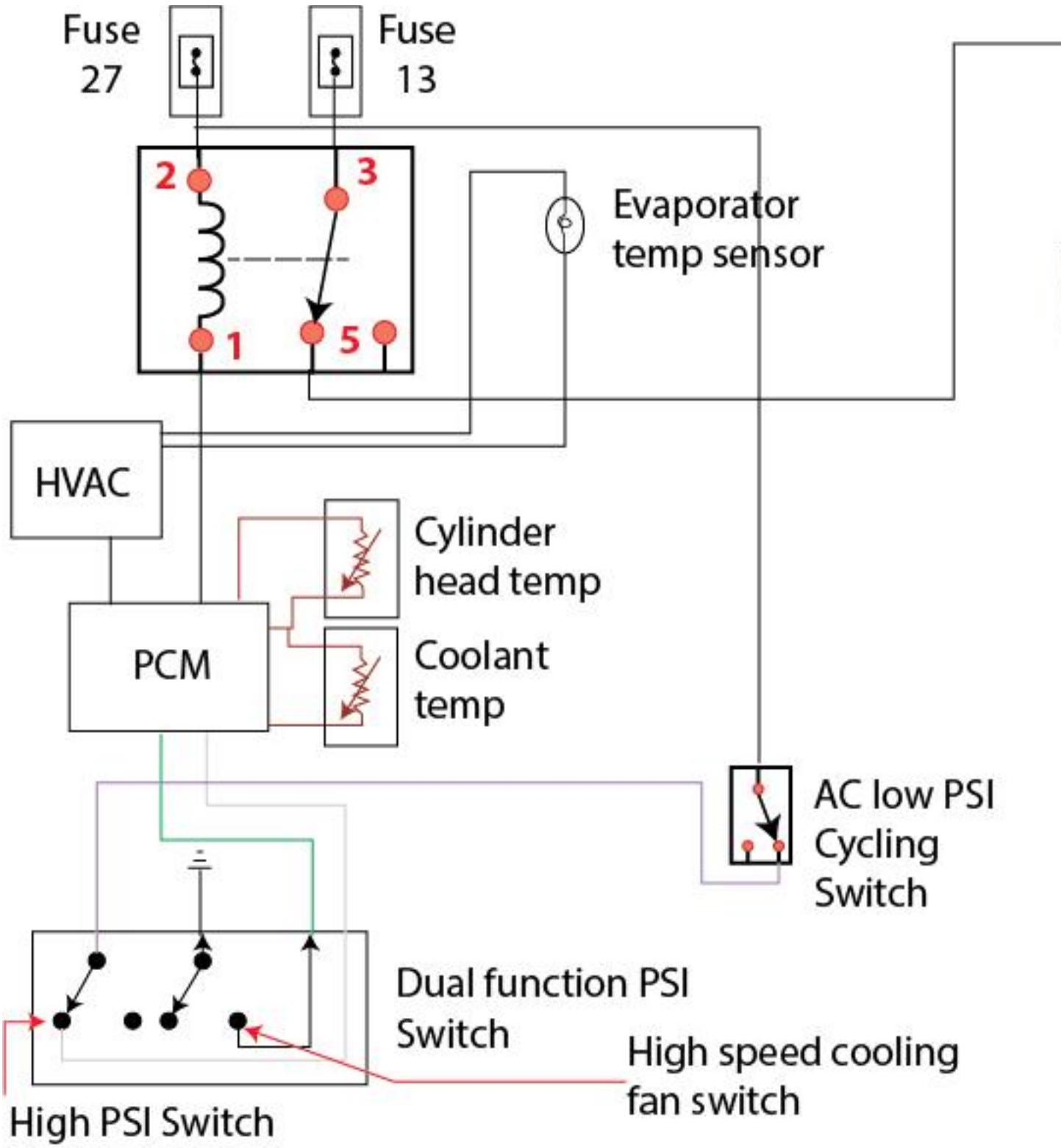
Fuse
27
Fuse
13
2
3
1
5
Evaporator
temp sensor
HVAC
Cylinder
head temp
PCM
Coolant
temp
AC low PSI
Cycling
Switch
Dual function PSI
Switch
High speed cooling
fan switch
High PSI Switch

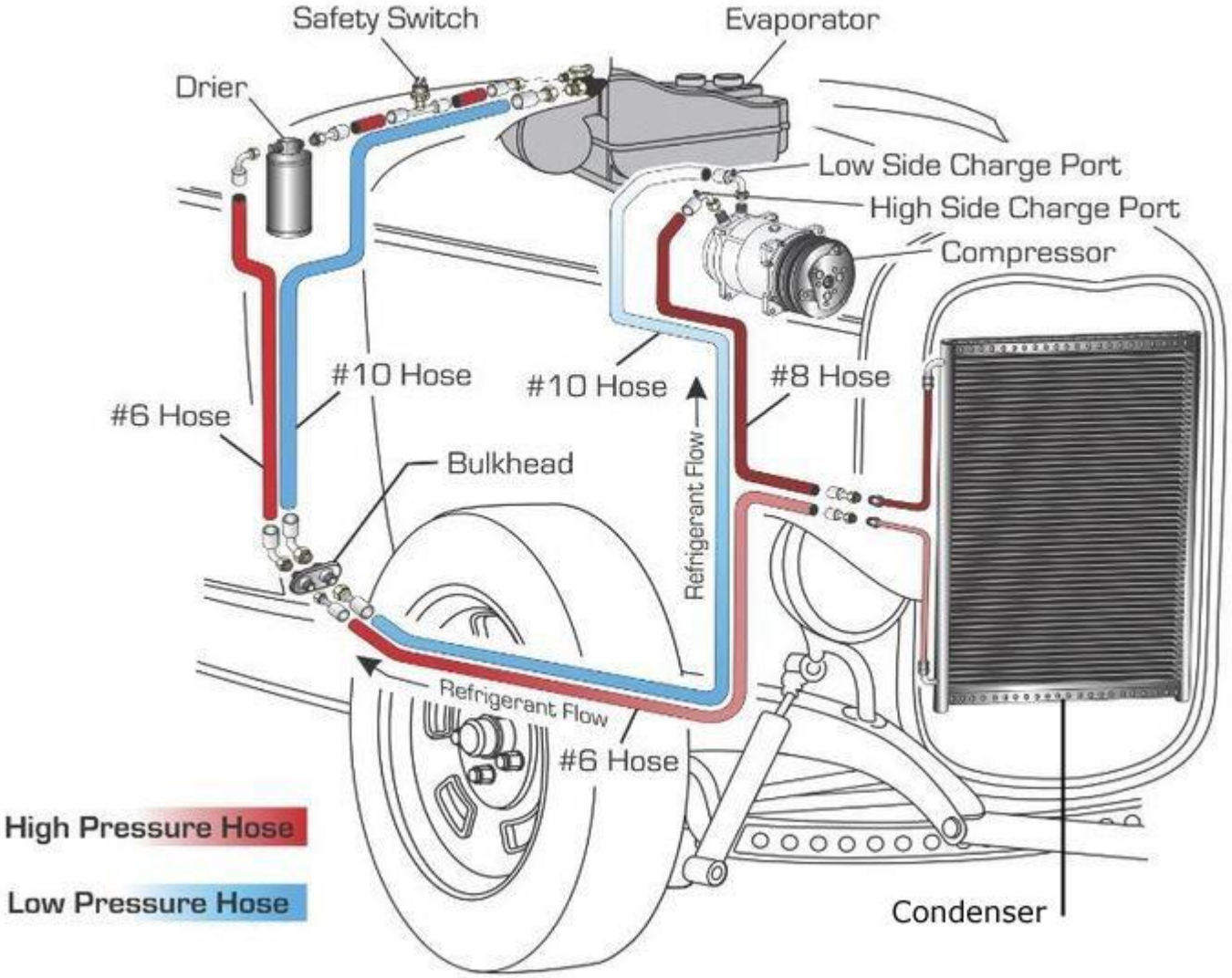
Safety Switch
Evaporator
Drier
Low Side Charge Port
High Side Charge Port
Compressor
#10 Hose
#10 Hose
#8 Hose
#6 Hose
Bulkhead
Refrigerant Flow
Refrigerant Flow
#6 Hose
High Pressure Hose
Low Pressure Hose
Condenser

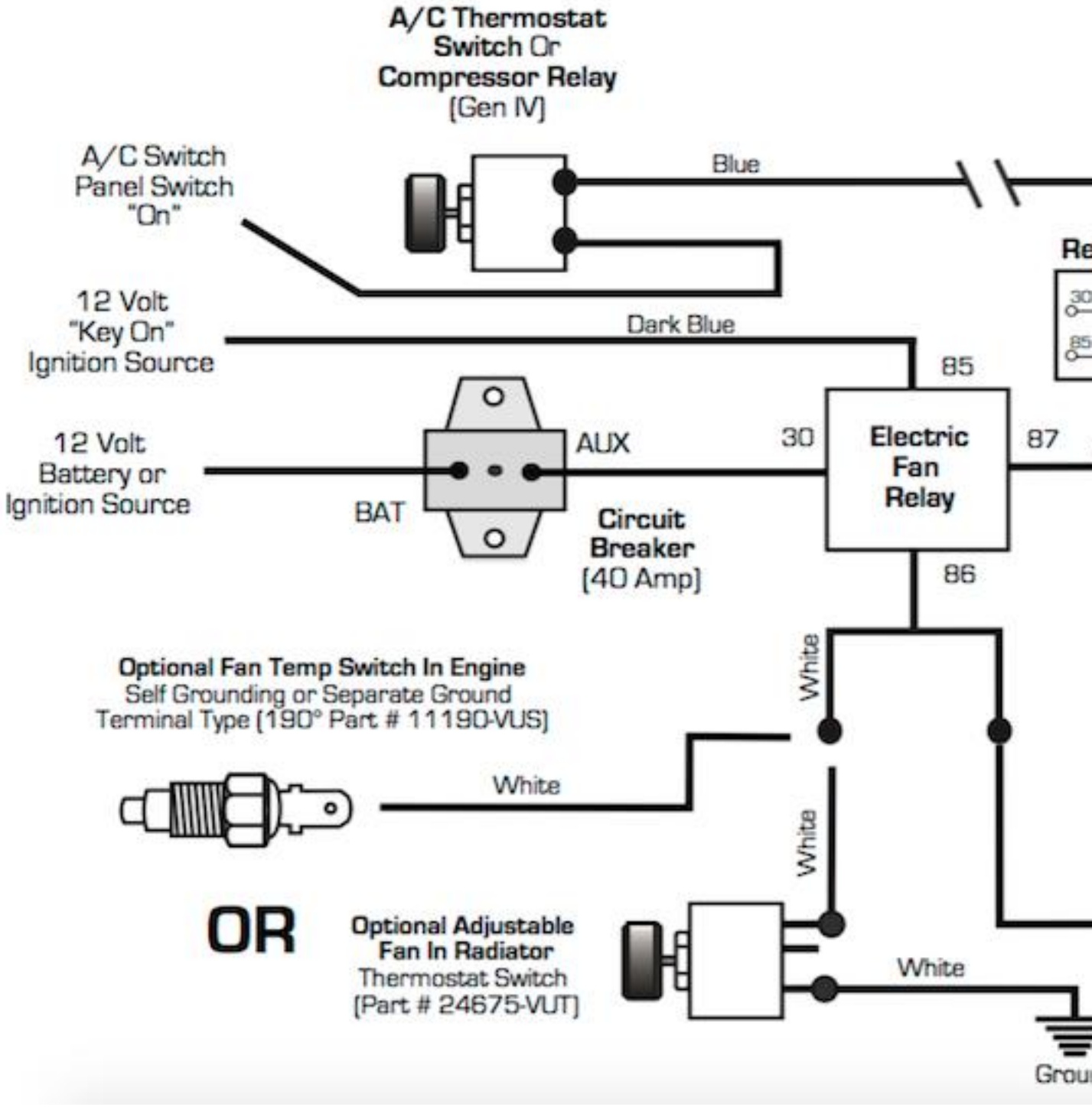
A/C Thermostat
Switch Or
Compressor Relay
(Gen IV)
A/C Switch
Panel Switch
"On"
Blue
12 Volt
"Key On"
Ignition Source
Dark Blue
85
12 Volt
Battery or
Ignition Source
AUX
30
Electric
Fan
Relay
87
BAT
Circuit
Breaker
(40 Amp)
86
White
Optional Fan Temp Switch In Engine
Self Grounding or Separate Ground
Terminal Type (190° Part # 11190-VUS)
White
White
OR
Optional Adjustable
Fan In Radiator
Thermostat Switch
(Part # 24675-VUT)
White

## '99 – 00 Models

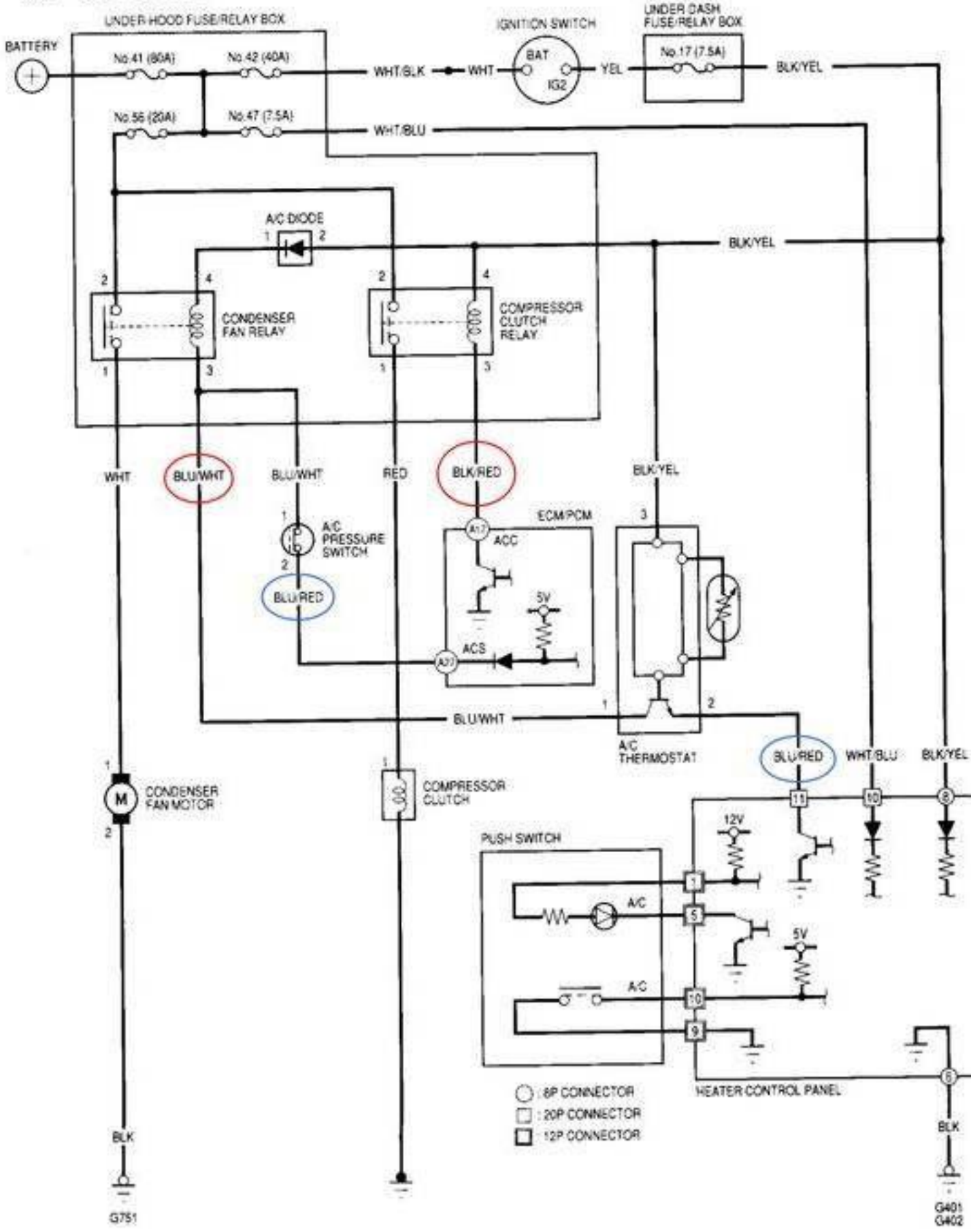
UNDER HOOD FUSE/RELAY BOX
BATTERY
No.41 (80A)
No.42 (40A)
No.56 (20A)
No.47 (7.5A)
WHT/BLK
WHT
IGNITION SWITCH
BAT
IG2
YEL
UNDER DASH FUSE/RELAY BOX
No.17 (7.5A)
BLK/YEL
WHT/BLU
A/C DIODE
BLK/YEL
CONDENSER FAN RELAY
COMPRESSOR CLUTCH RELAY
WHT
BLU/WHT
BLU/WHT
RED
BLK/RED
BLK/YEL
A/C PRESSURE SWITCH
BLU/RED
ECM/PCM
ACC
5V
ACS
BLU/WHT
A/C THERMOSTAT
BLU/RED
WHT/BLU
BLK/YEL
CONDENSER FAN MOTOR
COMPRESSOR CLUTCH
PUSH SWITCH
12V
A/C
5V
A/C
HEATER CONTROL PANEL
: 8P CONNECTOR
: 20P CONNECTOR
: 12P CONNECTOR
BLK
BLK
G751
G401
G402

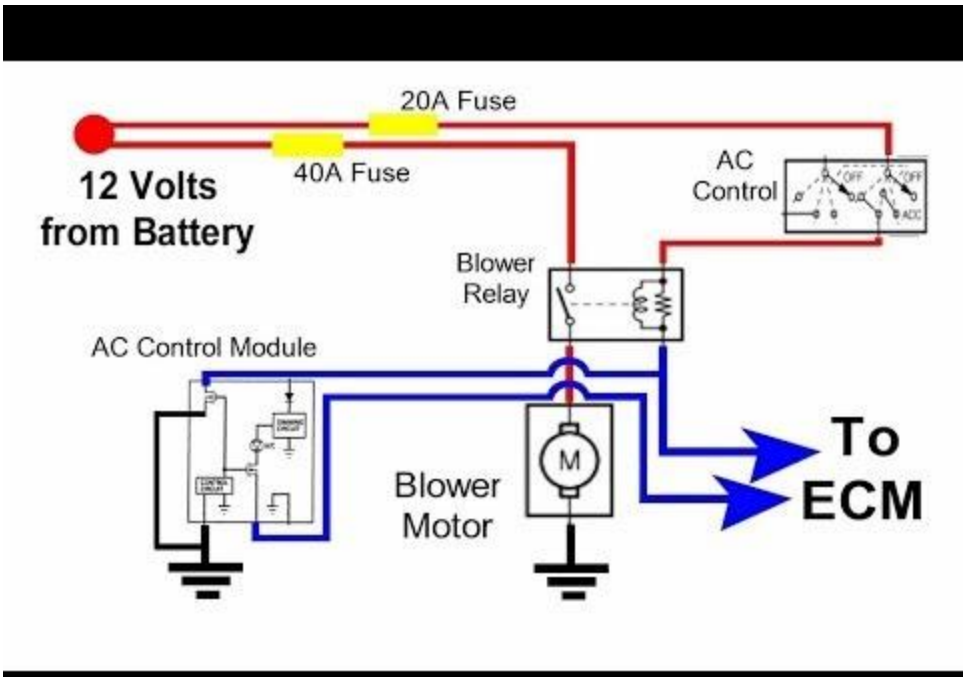
20A Fuse
40A Fuse
12 Volts
from Battery
AC
Control
OFF
OFF
ACC
Blower
Relay
AC Control Module
Blower
Motor
M
To
ECM

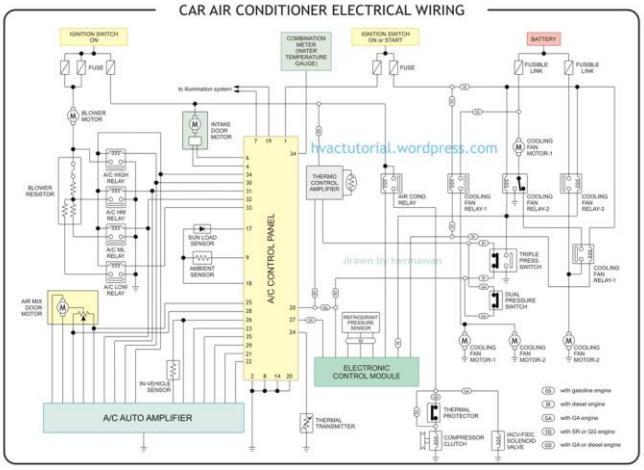
CAR AIR CONDITIONER ELECTRICAL WIRING
IGNITION SWITCH ON
FUSE
COMBINATION METER (WATER TEMPERATURE GAUGE)
IGNITION SWITCH ON or START
FUSE
BATTERY
FUSIBLE LINK
FUSIBLE LINK
to illumination system
BLOWER MOTOR
INTAKE DOOR MOTOR
hvactutorial.wordpress.com
COOLING FAN MOTOR-1
BLOWER RESISTOR
A/C HIGH RELAY
A/C HM RELAY
A/C ML RELAY
A/C LOW RELAY
A/C CONTROL PANEL
THERMO CONTROL AMPLIFIER
AIR COND. RELAY
COOLING FAN RELAY-1
COOLING FAN RELAY-2
COOLING FAN RELAY-3
SUN LOAD SENSOR
AMBIENT SENSOR
drawn by hermawan
TRIPLE PRESS. SWITCH
COOLING FAN RELAY-1
DUAL PRESSURE SWITCH
AIR MIX DOOR MOTOR
REFRIGERANT PRESSURE SENSOR
COOLING FAN MOTOR-1
COOLING FAN MOTOR-2
COOLING FAN MOTOR-2
ELECTRONIC CONTROL MODULE
IN-VEHICLE SENSOR
A/C AUTO AMPLIFIER
THERMAL TRANSMITTER
THERMAL PROTECTOR
COMPRESSOR CLUTCH
IACV-FIDC SOLENOID VALVE
with gasoline engine
with diesel engine
with GA engine
with SR or QG engine
with GA or diesel engine